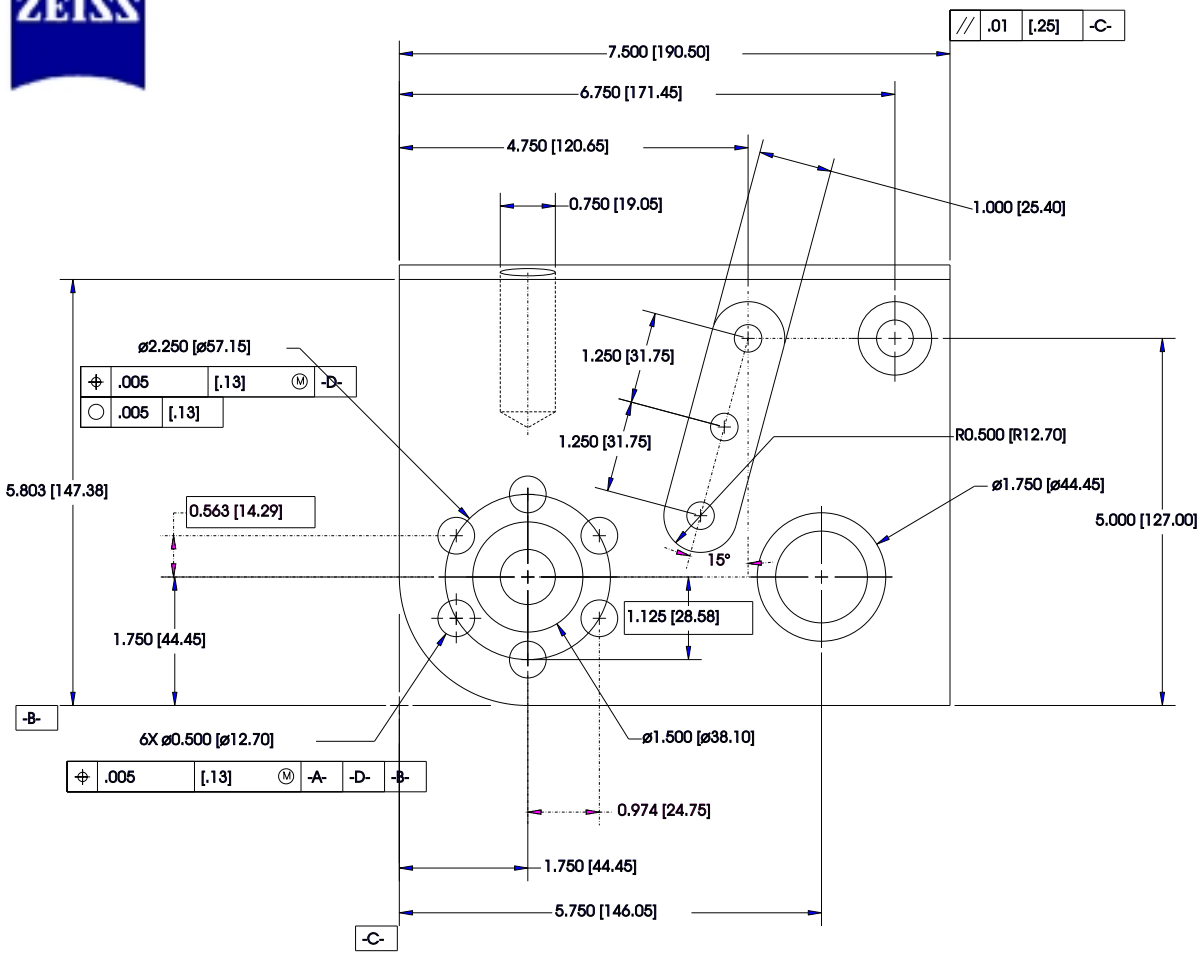

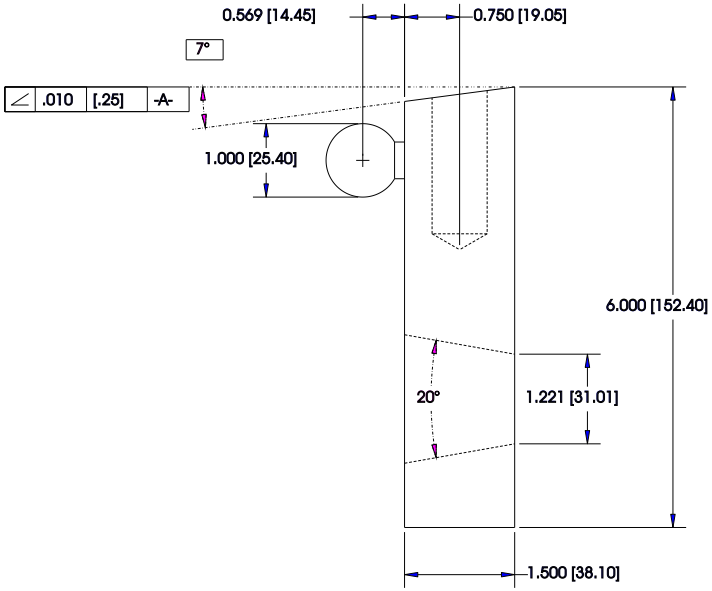

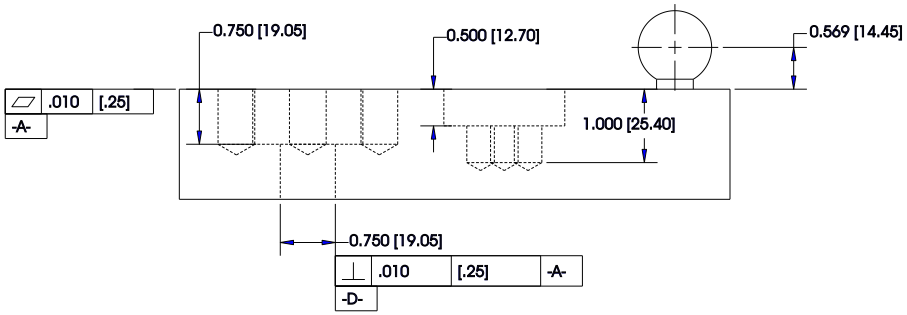

UNLESS OTHERWISE NOTED
MACHINING TOL.
INCHES
2 PLACE DEC. = .010
3 PLACE DEC. = .005
4 PLACE DEC. = .0005

ALL DIMENSION IN [] ARE
IN MILIMETERS
1 PLACE DEC. = .25
2 PLACE DEC. = .127
3 PLACE DEC. = .0127

BREAK ALL SHARP EDGES

Zeiss Training Block

Part# 623035.8073.000